Technische Universität Braunschweig

Institut für Betriebssysteme und Rechnerverbund

Seminar Verteilte Systeme SoSe'17: Persistent Memory

Arthur Martens, Vasili Sartakov, Björn Cassens

Sommersemester 2017

Purpose of this seminar

- Learn something about persistent memory

- Learn to read and understand scientific work
- Learn to write about scientific / technical work
- Get some practice in LaTex
- Learn to give a good talk
- Practice your English skills (if you like)

➔ Preparation for bachelor and master thesis

Outline

- Introduction
- Organizational
- What is Persistent Memory?
- Topics

Organizational

Mandatory Tasks

1. Chose a topic about persistent memory
   - Read thoroughly[1] and **understand it**
2. **Present** your topic
   - Requires preparation of slides
3. **Write an elaboration** about your topic
   - 8 to 10 pages (single column)
4. **Assist** two peers with your feedback
   - Attend dry run
   - Review the elaboration of your peers
5. Attend all talks

Don't miss anything

[1]) How to read a paper: http://dl.acm.org/citation.cfm?id=1273458

Organizational

Presentation

- 20-25 min talk (requires ~20 to 25 slides)
- 15 minutes for questions
- Must be finished one week in advance for a dry-run

- Recommended structure for your presentation
  - Introduction / motivation
  - Problem
  - Approach
  - Evaluation
  - Conclusion (= one slide summary)

Organizational

Presentation Best Practice

- You will need approximately 1 slide per minute => 20-25 slides
- Use corporate design of TU Braunschweig
  - Templates: https://www.ibr.cs.tu-bs.de/kb/templates.html
  - Put title, author and page numbers on each slide

- Don't use small font sizes
  - Recommended: 24 and 20 ,
  - Do not go below 16

- Your first slide should **not** be the outline!
- Your last slide should be your conclusion and not "thank you"

Presentation Best Practice Continued

- Keep slides simple and clean
  - Don't fill the entire slides full with text (like in this slide set)
  - Try to get one meaningful picture on each slide
  - ➔ The audience should listen to you rather than read your slides all the time
- Draw your own figures if possible (don't copy/paste)
- Emphasize important stuff
- Omit line breaks
- Always explain acronyms somewhere on the slide

Organizational

Elaboration

- About 8 to 10 pages of content
  - Title page and table of contents do not count towards page requirement
  - **In your own words** (don't copy any text from the paper!)

- Recommended structure
  1. Introduction & motivation
  2. Problem outline
  3. Solutions, approaches tackling the problem
  4. Evaluation
  5. Conclusion, Discussion of results, Outlook

- Templates: https://www.ibr.cs.tu-bs.de/kb/templates.html

Organizational

Assistance

- Each of you will have to assist two other students (peers)

- This means:
  - You have to **attend the dry-run** of your peers and provide feedback
  - You will have to review the elaboration of your peers and **provide feedback within one week**

- Attending the dry-run and reviewing elaboration is **mandatory**

➔ Missing assistance will lead to failing this course

Organizational

General Timeline

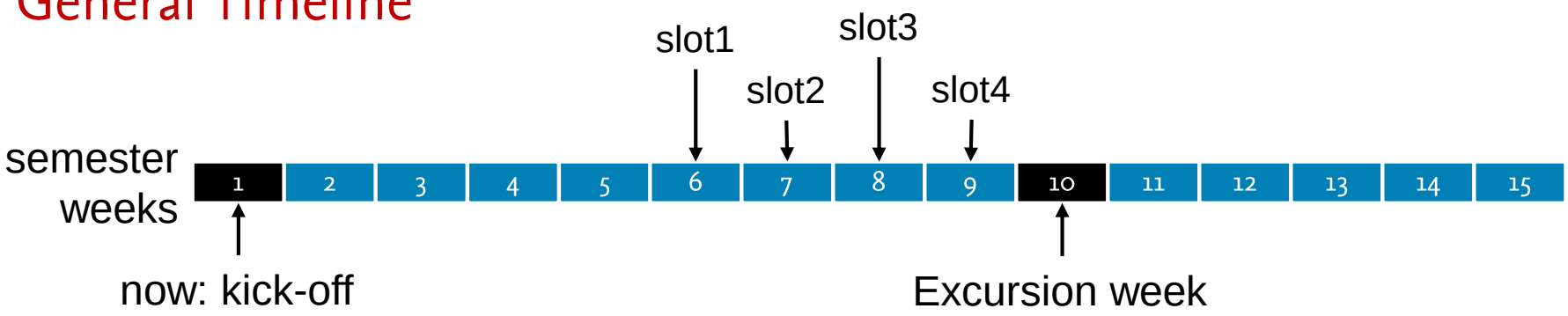

- Four appointments/timeslots for the presentations
  1. 08.05.2017
  2. 15.05.2017
  3. 22.05.2017
  4. 29.05.2017
  - Time: Monday 15:00 – 16:30
  - Each appointment will cover two topics

Organizational

Your Personal Timeline

- Week t-4: Read paper
- Week t-3: Discuss the paper with your supervisor
- Week t-2: Discuss presentation with your supervisor (optional)
- Week t-1: Presentation dry-run with peers and supervisor
  - Presentation must be in a finished state here!
- **Week t: Presentation of your topic**
- Week t+2: Submission of your elaboration for review
  - Elaboration must be in a finished state!
- Week t+3: You receive feedback from peers and supervisor
- Week t+4: Final submission of elaboration (applied feedback)

Final Comments

- **Don't underestimate** your tasks, start early!
- Attending the final talks of others is mandatory!

- **Participation** will have an impact on your grade
  - Provide meaningful feedback to your peers
  - Ask questions after the talks

- Send all submissions to martens@ibr.cs.tu-bs.de
  - slides, elaboration, feedback, final elaboration
  - **Missing a deadline** will have a negative impact on your grade
    - Up to failing this course!

Outline

- Introduction
- Organizational
- What is Persistent Memory?
- Topics

What is Persistent Memory

(Volatile) Memory

- Low latency (~10 ns)
- Byte-wise access

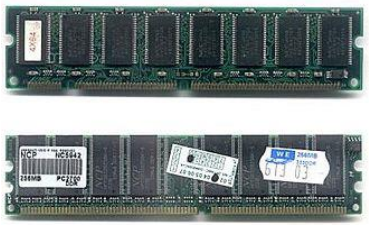

Persistent Memory / Storage Class Memory

- Still low latency (~10 to 100 ns)
- Byte-wise access

Usable as main memory

Persistent Storage (SSD / HDD)

- High latency
  (in the region of us up to ms)
- Block-wise access pattern

Usable only as I/O device (periphery)

source: Google / Wikipedia

What is Persistent Memory

Persistent Memory Technologies

- Battery-backed DRAM
- Ferroelectric RAM (FRAM / FeRAM)
- Magnetic RAM (MRAM)
- Spin Transfer Torque RAM (STTRAM)
- Phase Change RAM (PCRAM)
- … (more available)

Battery-backed Dram

- Uses plain DRAM for data storage
- On power outage:
  - Energy from battery is used to transfer data from DRAM to Flash
- On Startup:
  - DRAM state is restored from Flash

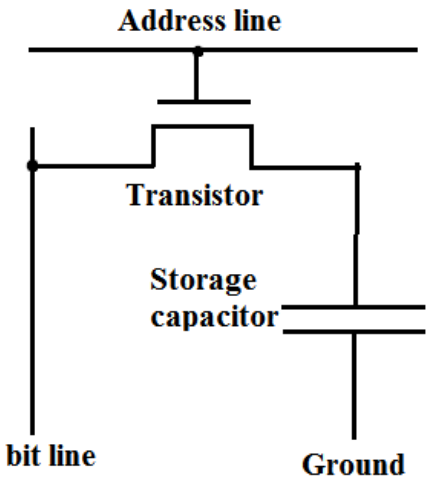

source: Google

Ferroelectric RAM (FeRAM / FRAM)

- Uses ferroelectric materials to form a ferroelectric capacitor
- Polarization of ferroelectric material represents data
- Polarization may be persistently changed by applying a voltage
- Similar circuit structure to DRAM cells

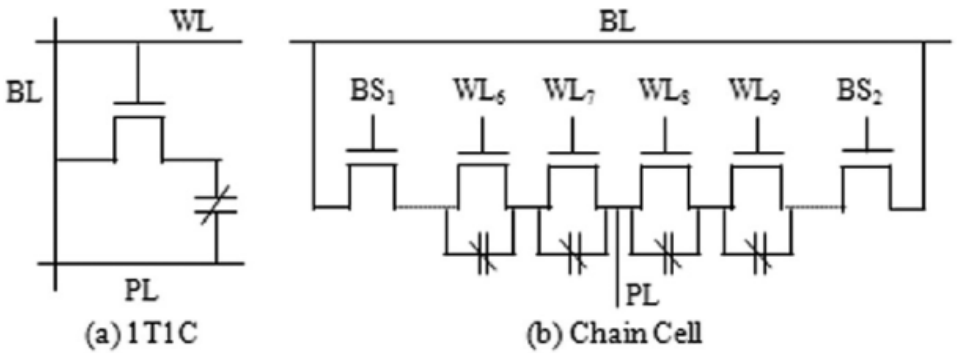

source: M. Kryder et. al.: **After Hard Drives - What Comes Next?**
IEEE trans. on Magnetics, VOL. 45, NO. 10, 2009

Magnetic Ram (MRAM)

- Uses a Magnetic Tunnel Junction (MTJ) to store data
- MTJ is a two-layer magneto-resistive structure
  - One layer is free and may change its magnetic orientation
- Resistance difference is used for information readout

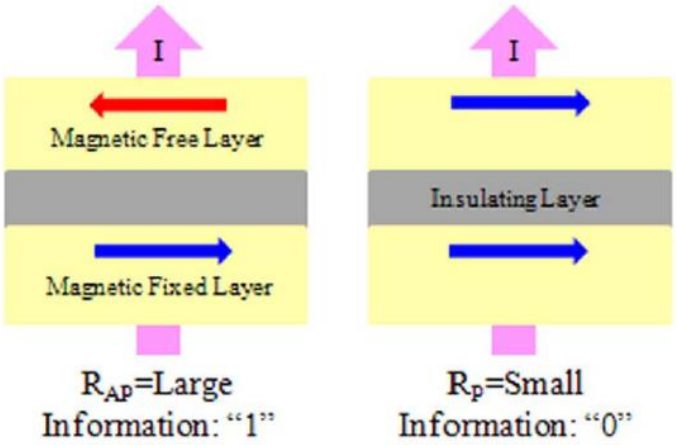

source: M. Kryder et. al.: **After Hard Drives - What Comes Next?** IEEE trans. on Magnetics, VOL. 45, NO. 10, 2009

Spin-Transfer-Torque-RAM (STT-RAM)

- Uses a MTJ similar to MRAM to store data
- Tackles high cell writing current
  and large cell size problems posed by MRAM
- Switching stored information via polarized electron current
  rather than using an electric field

➔ Simplified cell structure

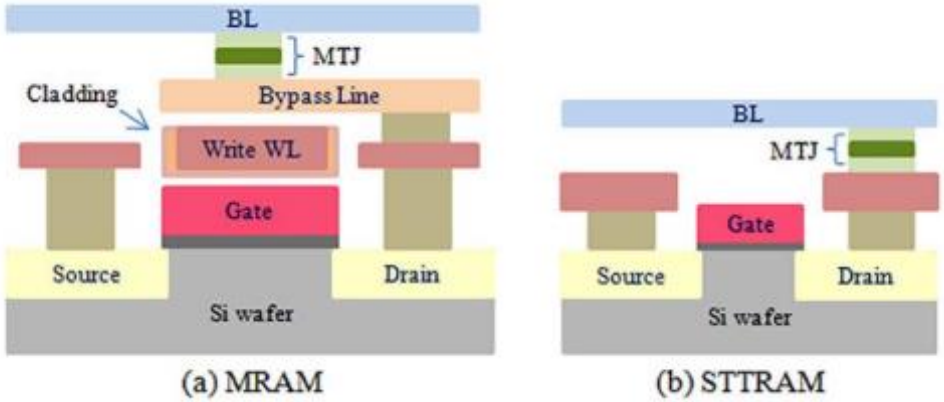

source: M. Kryder et. al.: **After Hard Drives - What Comes Next?**
IEEE trans. on Magnetics, VOL. 45, NO. 10, 2009

Phase Change Memory (PCM)

- Uses the crystalline state of chalcogenide glass to store data
- Changing the crystalline state:
  - Quickly heating & quenching sets the crystal amorphous
  - Holding a temperature for some time restores the polycrystalline state

- Resistance depends on glass state

➔ Stored information

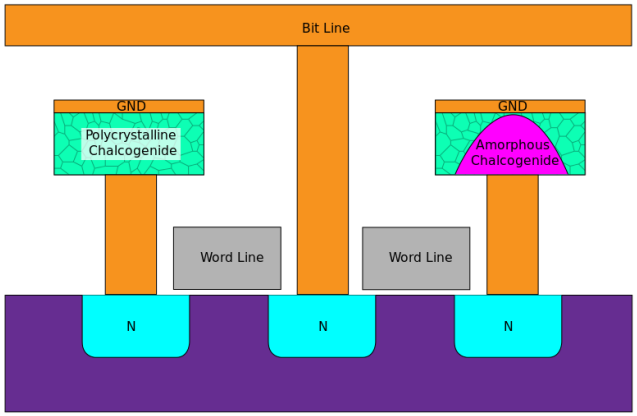

source: wikipedia

What is Persistent Memory

Performance / Latency (in ns)

- Byte addressable memory

	DRAM	FeRAM	PCM	MRAM	STT-RAM
Write	10	50	100	12	10
Read	10	75	20	12	10

- Block addressable memory

	NAND FLASH	HDD
Write	200K	9,5M
Read	25K	8,5M

source: M. Kryder et. al.: **After Hard Drives - What Comes Next?**
IEEE trans. on Magnetics, VOL. 45, NO. 10, 2009

Outline

- Introduction
- Organizational
- What is Persistent Memory?
- Topics

Topics: Technology

01) Scalable high performance main memory system using phase-change memory technology

- Characteristics of PCM
- Implications of using persistent memory
- Supervisor: Björn Cassens

02) Enabling ultra-low power operation in high-end wireless sensor networks nodes

- Efficient sleep mode for a high performance micro controller
- Supervisor: Björn Cassens

Topics: Energy Awareness

03a) PDRAM: a hybrid PRAM and DRAM main memory system

03b) Power-aware memory management for hybrid main memory

- Energy-aware page placement in a hybrid memory system
- Supervisor: Björn Cassens

04) Page placement in hybrid memory systems

- Hardware support for Energy-aware page placement
- Supervisor: Björn Cassens

Topics: Concepts for Applications

05) Whole-system persistence

- Puts entire system into persistent main memory
- Discusses the consequences
- Supervisor: Vasili Sartakov

06) Temporality a NVRAMbased Virtualization Platform

- Overcomes volatile states in the hardware via virtualization
- Hypervisor makes entire virtual machine persistent
- Supervisor: Vasili Sartakov

Topics: Concepts for Applications

07) Mini-Ckpts: Surviving OS Failures in Persistent Memory

- Fault tolerance in High Performance Computing
- Application survives operating system crashes
- Supervisor: Vasili Sartakov

08) Towards software defined persistent memory: rethinking software support for heterogenous memory architectures

- Uniform memory layer that
  - ...hides physical characteristics of memory technologies
  - ...hides the way to access memory
- Supervisor: Vasili Sartakov

Topics: File Systems for Persistent Memory

09) System software for persistent memory

- Enable low overhead access to persistent memory
- Provide naming and access control
- Support legacy posix compliant applications
- Supervisor: Arthur Martens

10) Aerie: flexible file-system interfaces to storage-class memory

- Lightweight user space library filesystem
- Two interfaces:
  - posix (open/close/read/write)
  - flat (put/get/erase)
- Supervisor: Arthur Martens

Topics: Persistent Memory Allocators that Provide a Persistent Heap

11) Mnemosyne: lightweight persistent memory

- General approach to build a persistent heap
- Ensure consistency of persistent data in the presence of power failures
- Supervisor: Arthur Martens

12) NV-Heaps: Making Persistent Objects Fast and Safe with Next-Generation, Non-Volatile Memories

- Programmer support for directly accessed persistent memory
- Supervisor: Arthur Martens